CHICAGO COIN

TV SUPER FLIPPER

SCHEMATIC

CHICAGO DYNAMIC INDUSTRIES, INC.

1725 DIVERSEY BOULEVARD ★ CHICAGO, ILLINOIS 60614 ★ PHONE (312) 935-4600

MODEL 40-5 5.0 A
M1250

STANDARD POWER SUPP.

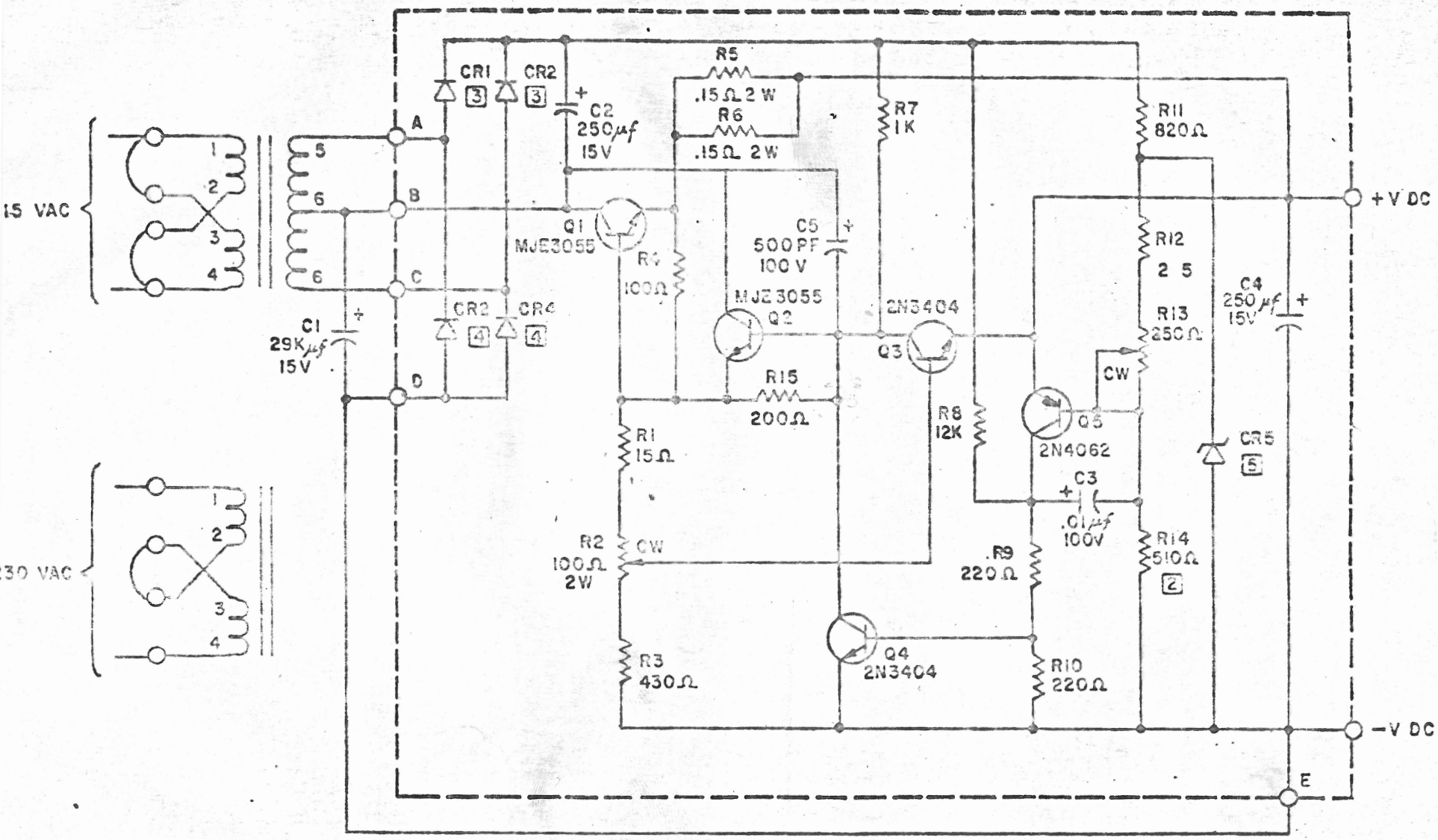

NOTES:

1 CARBON RESISTOR, TOL. ± 5%, 1/2 W
2 FILM RESISTOR, TOL. ± 2%, 1/2 W
3 PART NO. IN5391, WESTINGHOUSE

Standard Power, Inc

C.C. SUPER FLIPPER

OUT-HOLE BARS ADJUSTMENT

PLUG-1 ON A - FOR NO BARS
PLUG-1 ON B - FOR TWO "X" BARS (NORMAL)
PLUG-2 ON C - FOR NO "Z" BARS (SPECIAL)
PLUG-2 ON D - FOR "Z" BARS (SPECIAL)
"Y" BAR (BONUS)

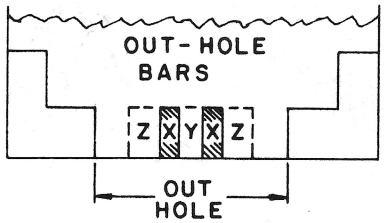

OUT-HOLE BARS ADJUSTMENT

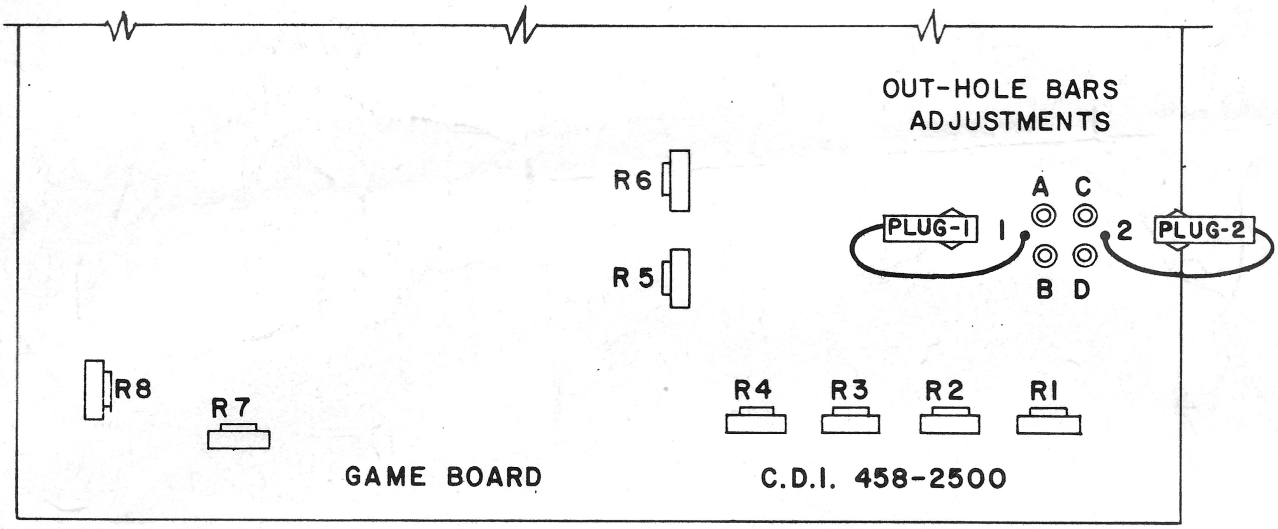

FLIPPER ADJUSTMENTS-R1-R2-R3-R4-R5-R6

ORDER OF ADJUSTMENT

R5. RIGHT SPACING - 1/8 INCH.
R6. LEFT SPACING - 1/8 INCH.
R2. FLIPPER PADDLE P1 - LEFT EDGE
1/8 IN. FROM WHITE OUTSIDE BORDER.
R1. FLIPPER PADDLE P2 - RIGHT EDGE
ADJUST TO CENTER OF "X" BAR.
(HOLD LEFT FLIPPER BUTTON WHILE ADJUSTING)
R4. FLIPPER PADDLE P3 - LEFT EDGE
ADJUST TO CENTER OF "X" BAR.
(HOLD RIGHT FLIPPER BUTTON WHILE ADJUSTING)
R3. FLIPPER PADDLE P4 - RIGHT EDGE
1/8 IN. FROM WHITE OUTSIDE BORDER.
R7. SET PIN 3 G4 TO 100 HZ.
GAME START BUT NOT SHOOT.
R8. CLOCKWISE - FASTER BALL ACTION.
C/CLOCKWISE - SLOWER BALL ACTION.

PLAYFIELD

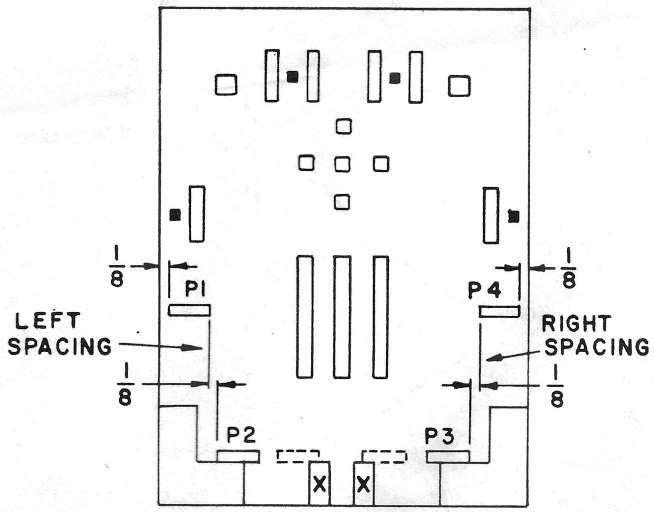

PART OF 458-2500 GAME BOARD (1-7)

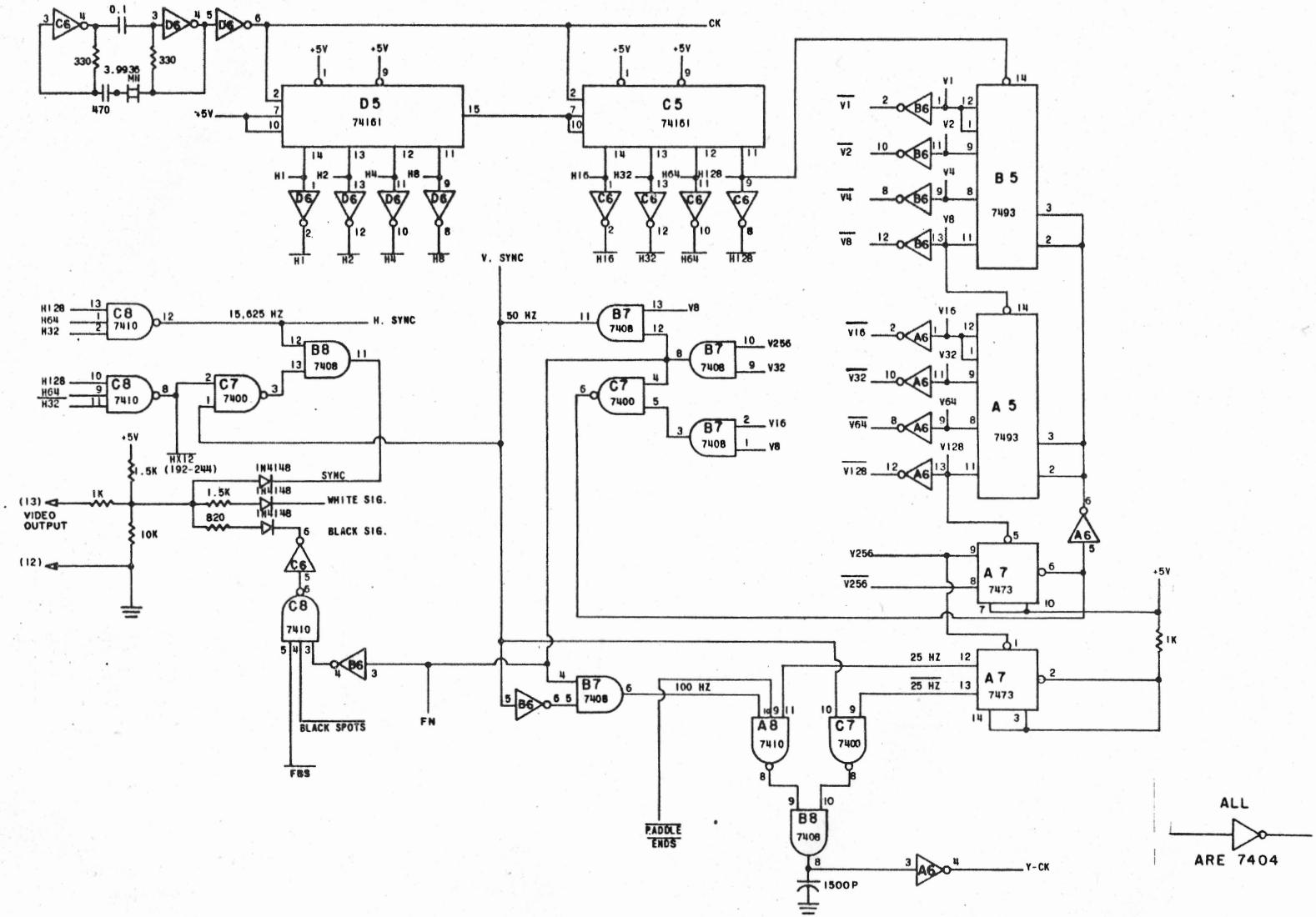

CHICAGO DYNAMIC INDUSTRIES, INC.	TV SUPER FLIPPER	458	PAGE
1725 DIVERSEY BLVD. CHICAGO	CLOCK & DIVIDER		1

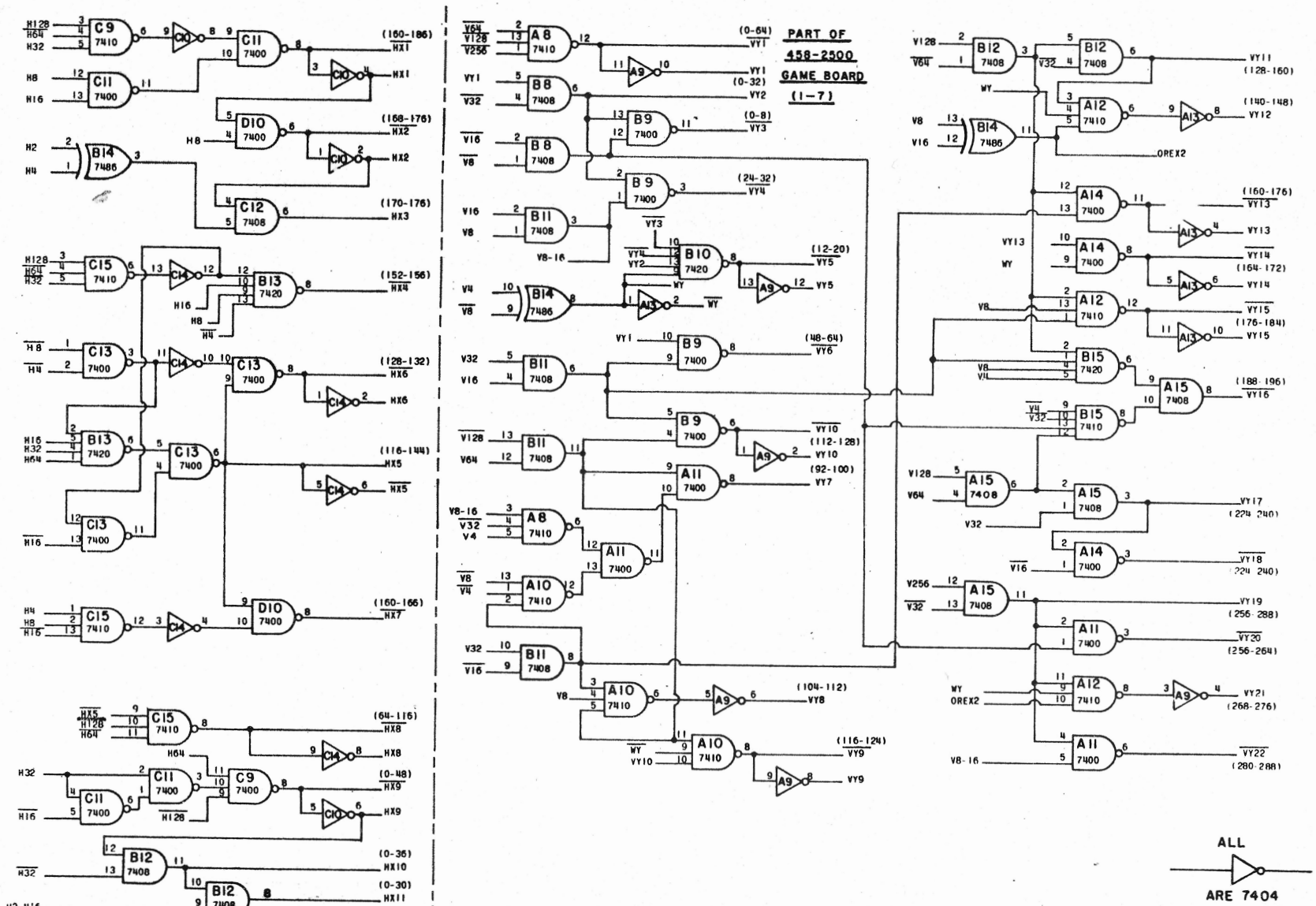

CHICAGO DYNAMIC INDUSTRIES, INC. 1725 DIVERSEY BLVD. CHICAGO	TV SUPER FLIPPER 458 BUMPER GEOMETRY	PAGE 2

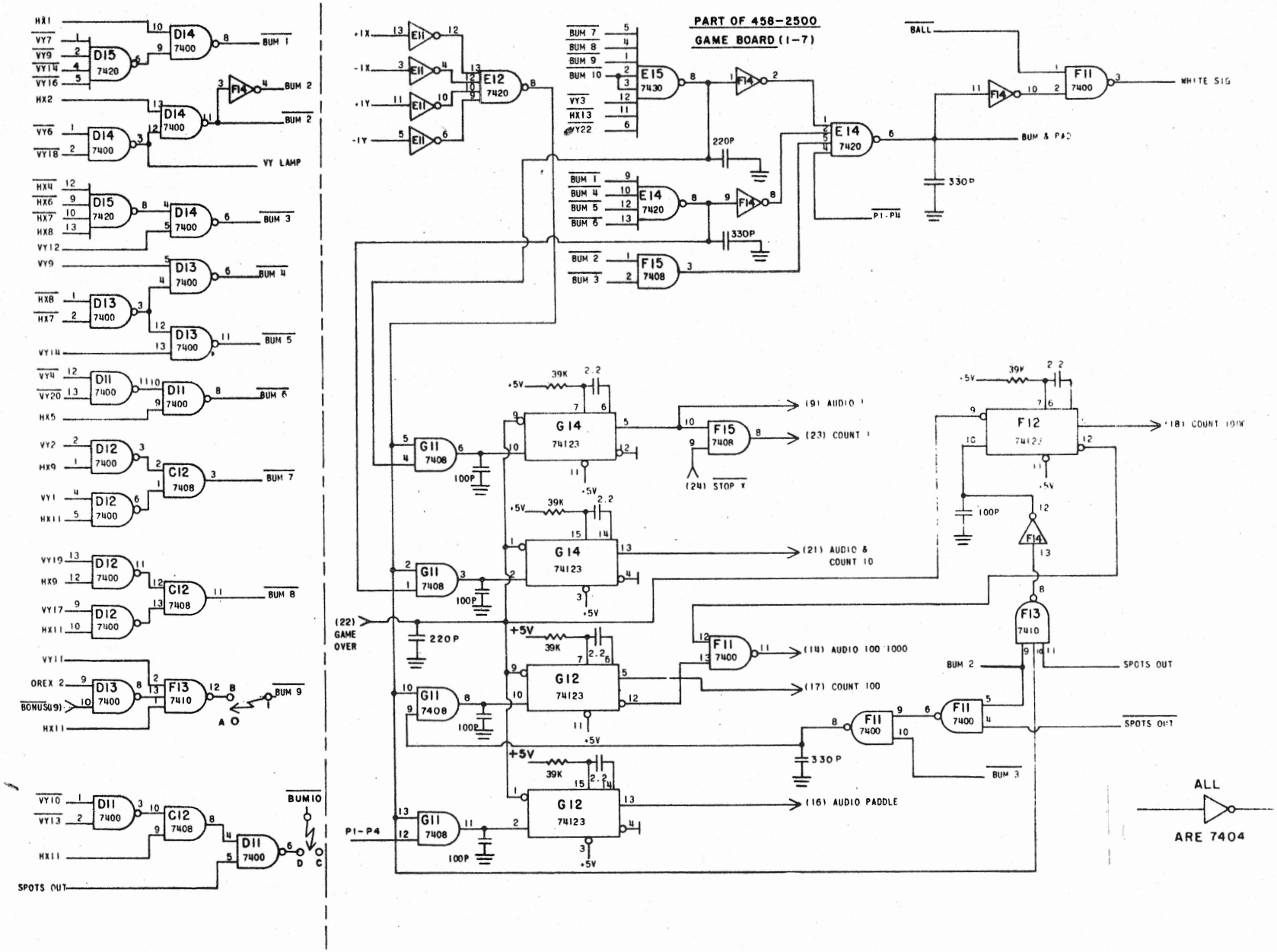

CHICAGO DYNAMIC INDUSTRIES, INC.	TV SUPER FLIPPER	458	PAGE
1725 DIVERSEY BLVD. CHICAGO	BUMPER & PADDLE GENERATOR		3

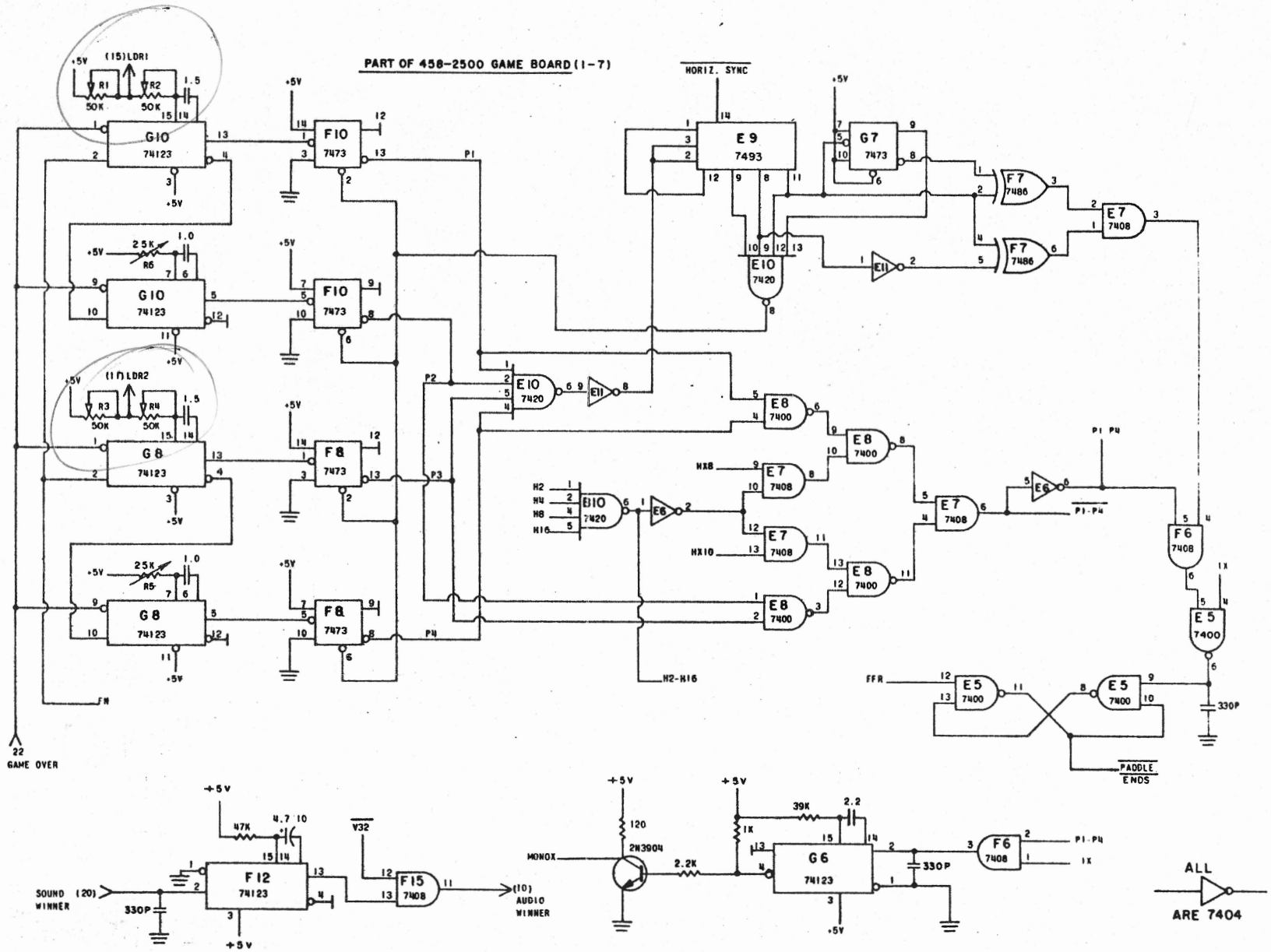

CHICAGO DYNAMIC INDUSTRIES, INC. 1725 DIVERSEY BLVD. CHICAGO	TV SUPER FLIPPER	458	PAGE
	PADDLES		4

PART OF 458-2500 GAME BOARD (1-7)

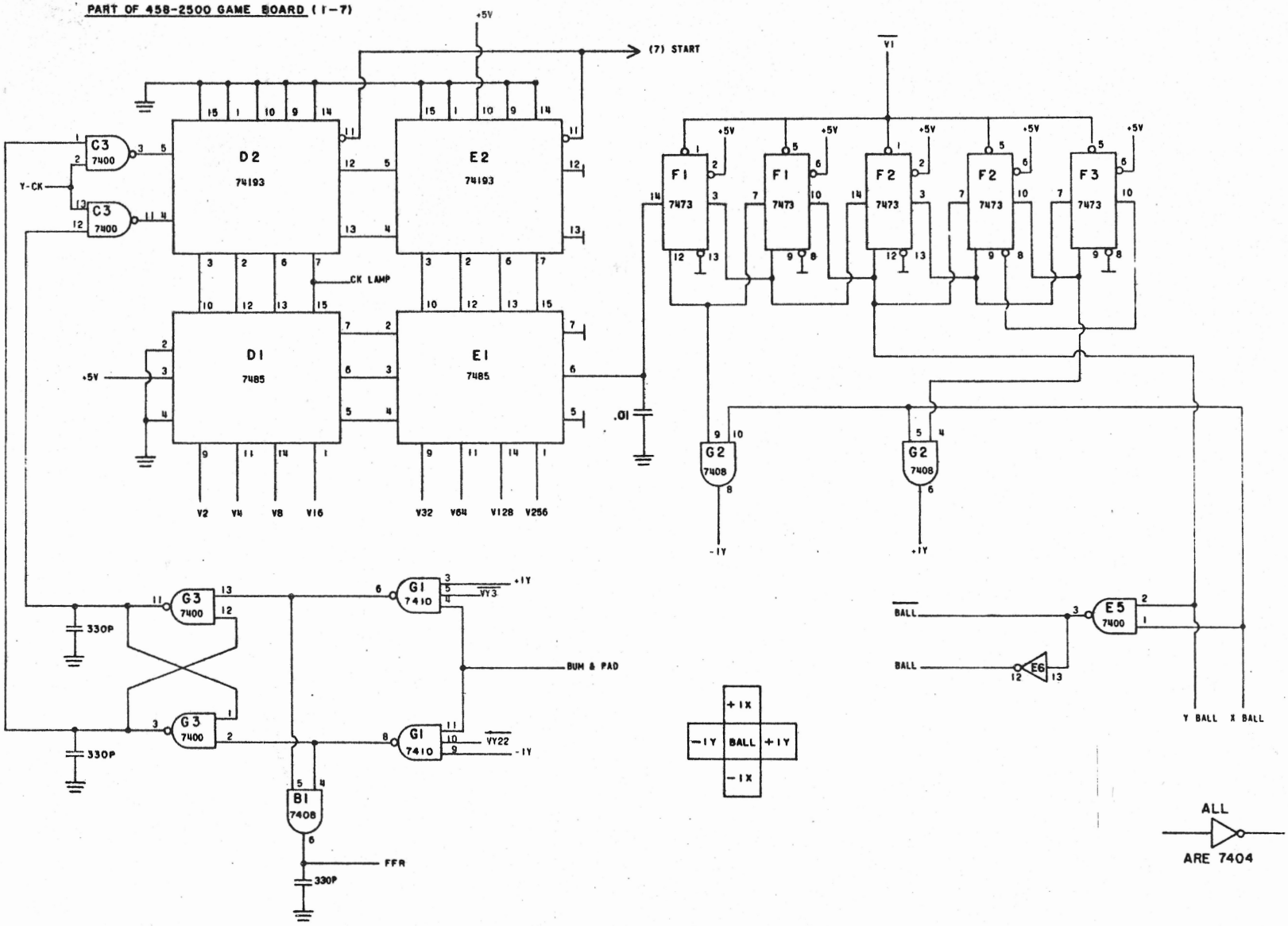

CHICAGO DYNAMIC INDUSTRIES, INC.	TV SUPER FLIPPER	458	PAGE
1725 DIVERSEY BLVD. CHICAGO	Y-BALL		5

PART OF 458-2500 GAME BOARD (1-7)

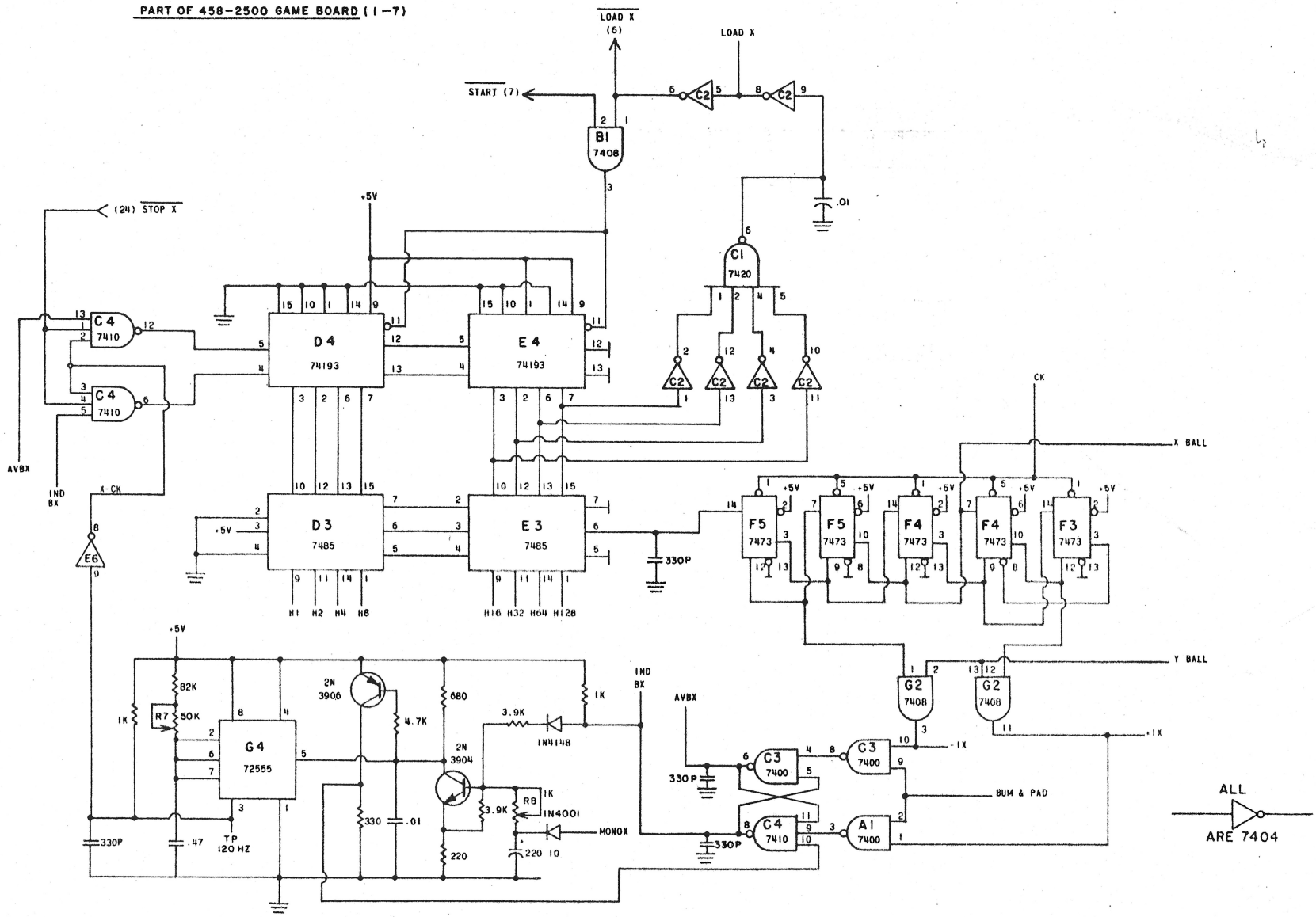

CHICAGO DYNAMIC INDUSTRIES, INC.	TV SUPER FLIPPER	458	PAGE
1725 DIVERSEY BLVD. CHICAGO	X-BALL		6

PART OF 458-2500 GAME BOARD (1-7)

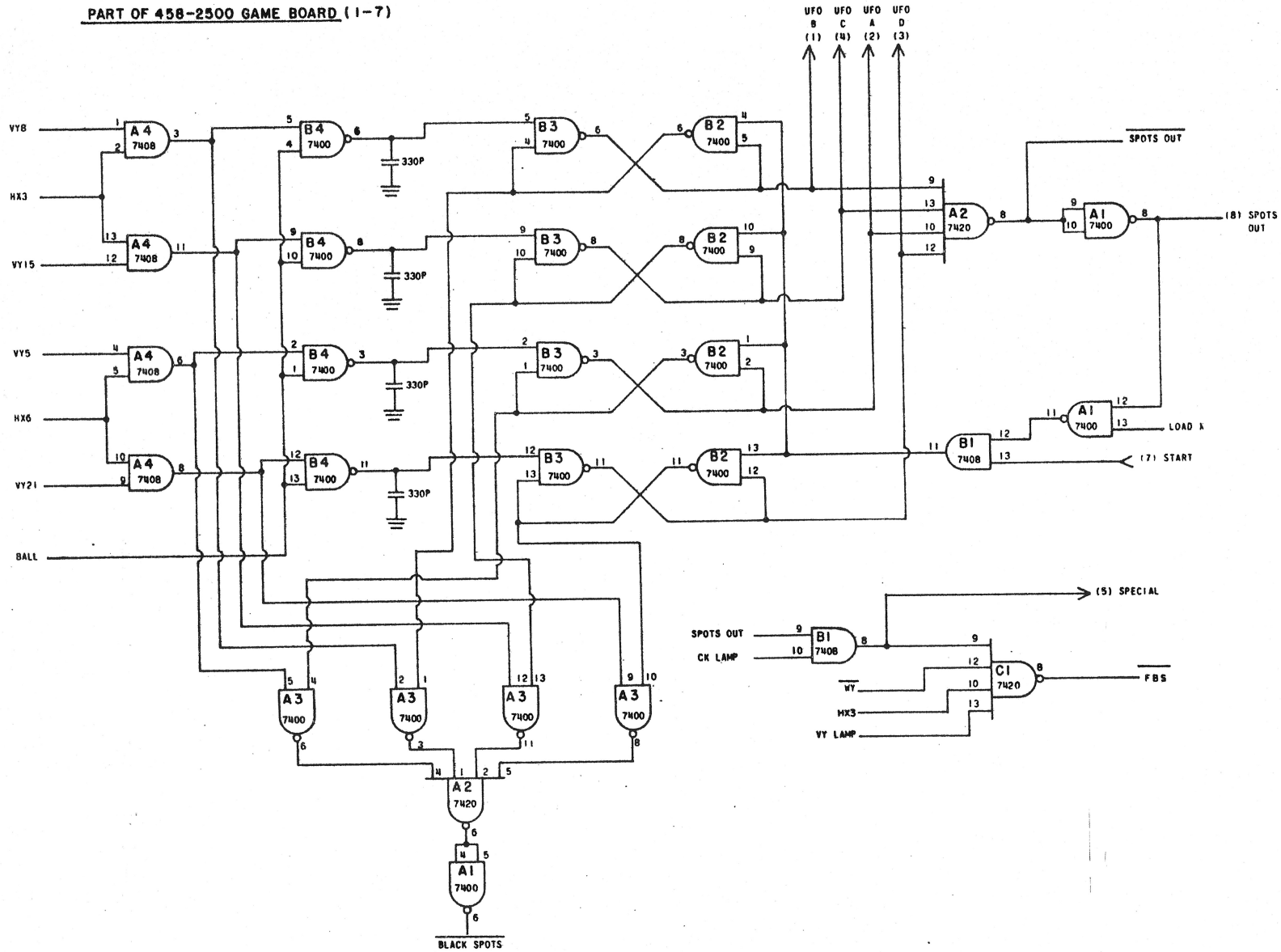

CHICAGO DYNAMIC INDUSTRIES, INC. 1725 DIVERSEY BLVD. CHICAGO	TV SUPER FLIPPER	458	PAGE
	BLACK SPOTS		7

Count down

	Q_A	Q_B	Q_C	Q_D
	3	2	6	4
5	H	L	H	L
4	L	L	H	L
3	H	H	L	L
2	L	H	L	L
1	H	L	L	L
0	L	L	L	L

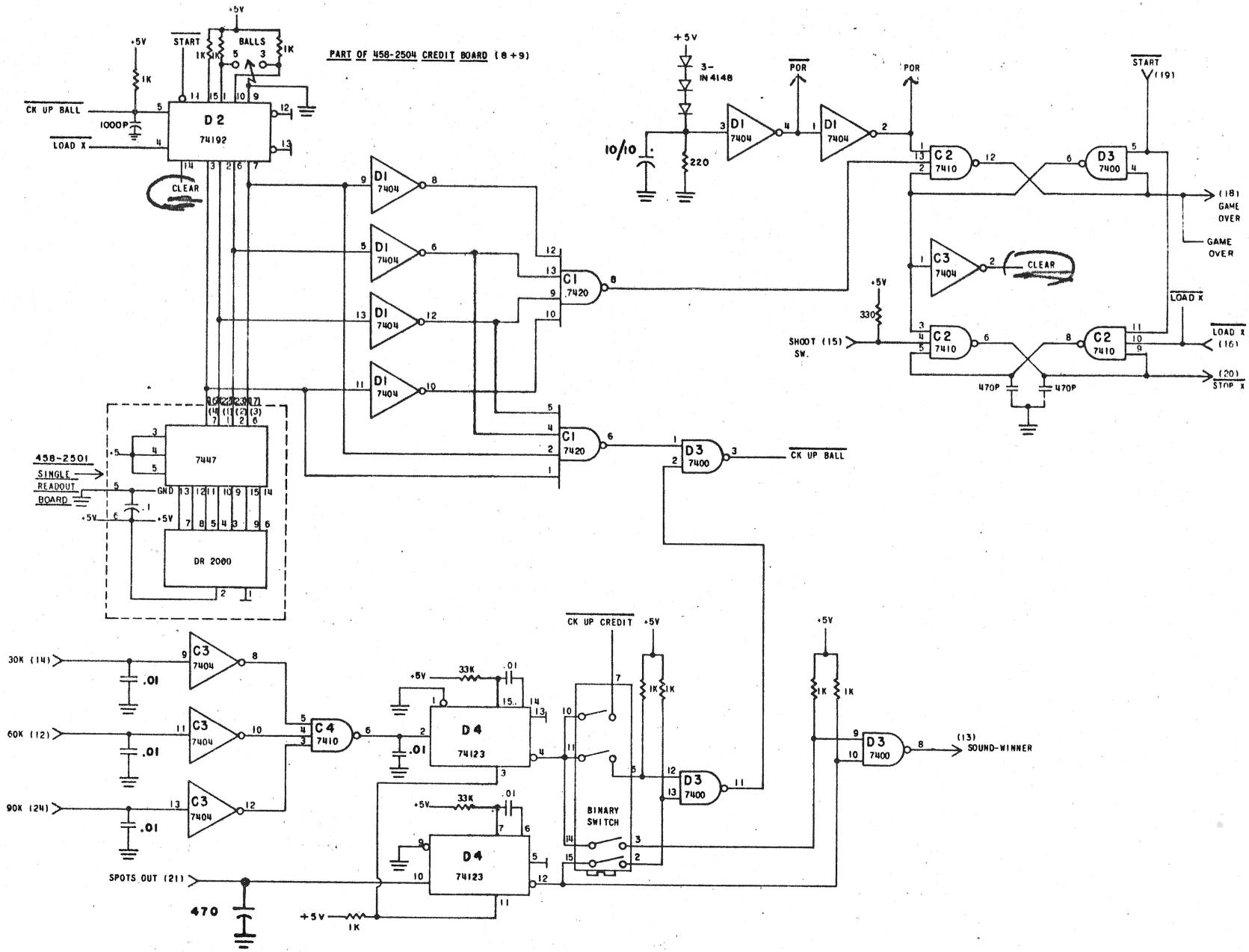

CHICAGO DYNAMIC INDUSTRIES, INC. 1725 DIVERSEY BLVD. CHICAGO	TV SUPER FLIPPER	458	PAGE
	BALL COUNT-CREDIT BOARD		8

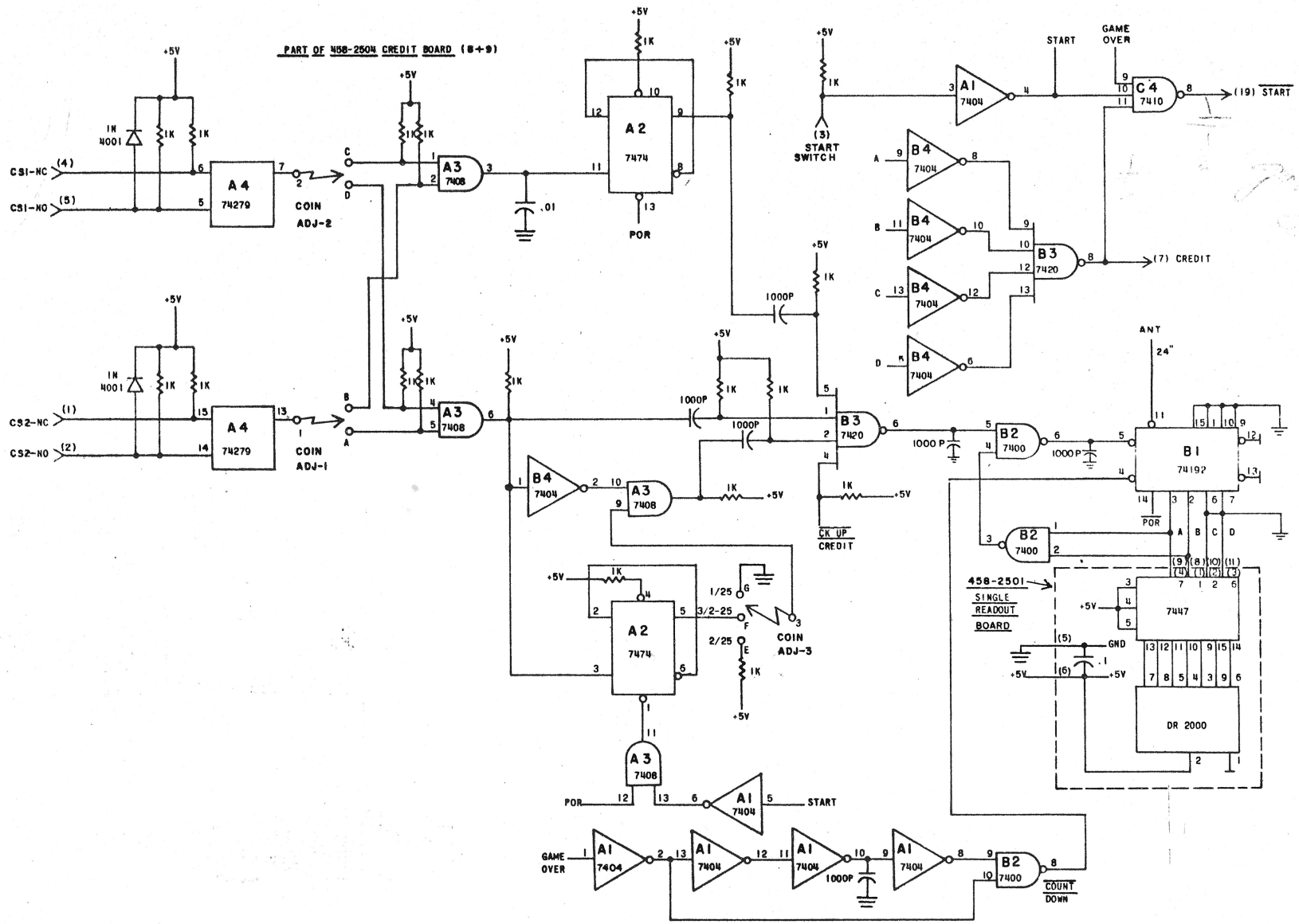

CHICAGO DYNAMIC INDUSTRIES, INC. 1725 DIVERSEY BLVD. CHICAGO	TV SUPER FLIPPER	458	PAGE
	CREDIT COUNT-CREDIT BOARD		9

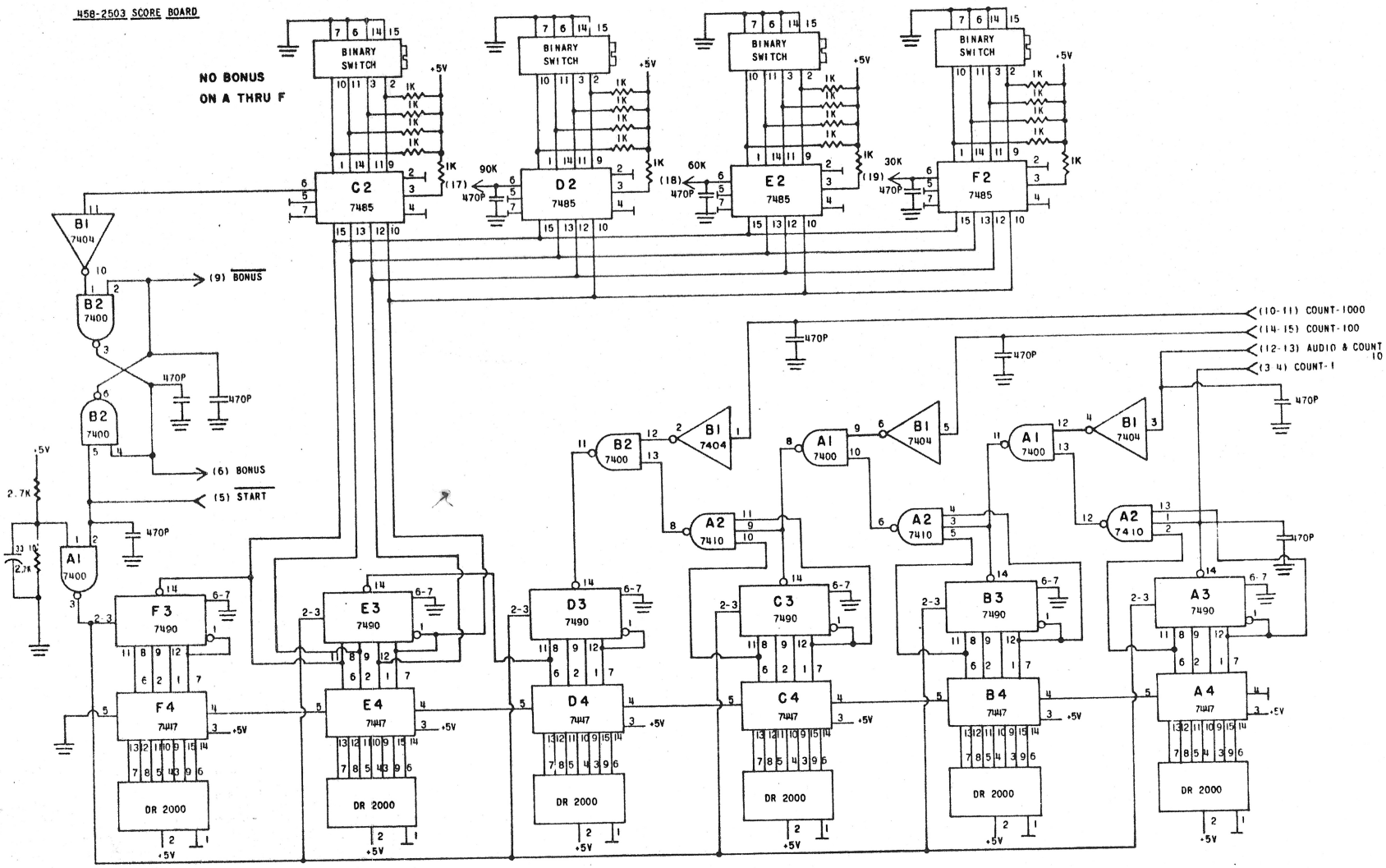

CHICAGO DYNAMIC INDUSTRIES, INC. 1725 DIVERSEY BLVD. CHICAGO	TV SUPER FLIPPER	458	PAGE
	SCORE BOARD		10

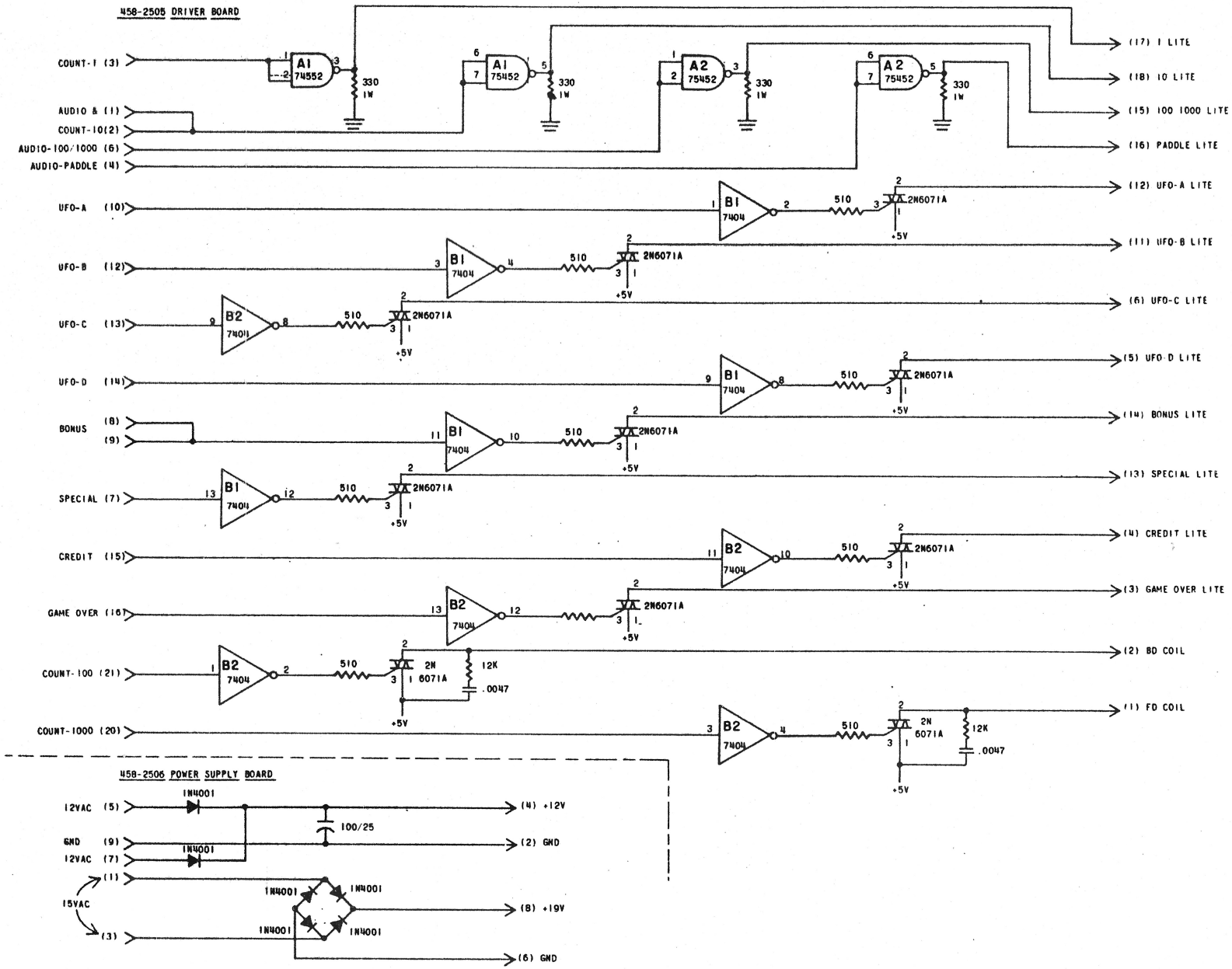

CHICAGO DYNAMIC INDUSTRIES, INC. 1725 DIVERSEY BLVD. CHICAGO	TV SUPER FLIPPER	458	PAGE
	DRIVER & POWER SUPPLY		11

458-2502 SOUND BOARD

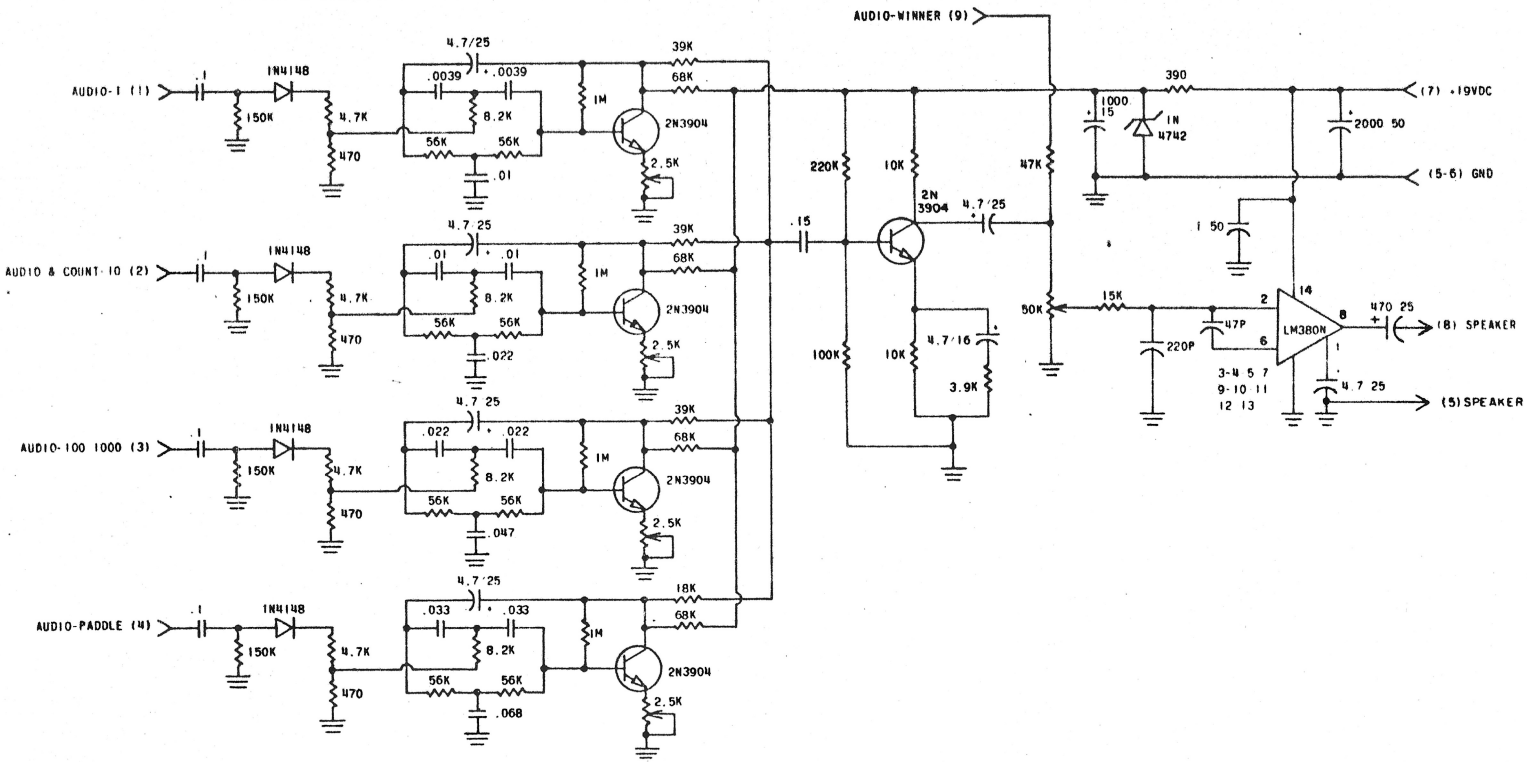

CHICAGO DYNAMIC INDUSTRIES, INC.	TV SUPER FLIPPER	458	PAGE
1725 DIVERSEY BLVD. CHICAGO	SOUND BOARD		12

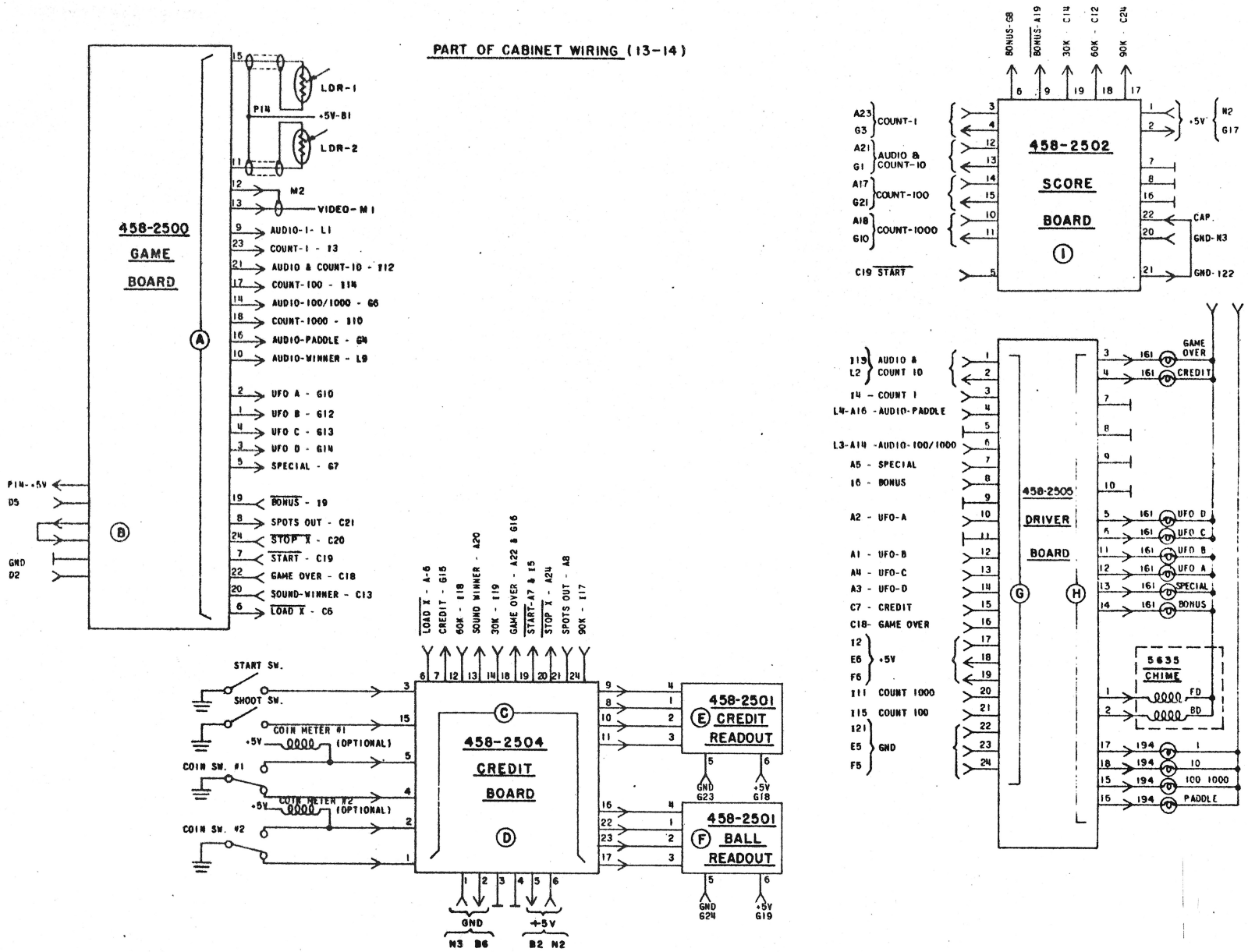

CHICAGO DYNAMIC INDUSTRIES, INC. 1725 DIVERSEY BLVD. CHICAGO	TV SUPER FLIPPER	458	PAGE
	CABINET-A		13

PART OF CABINET WIRING (13-14)

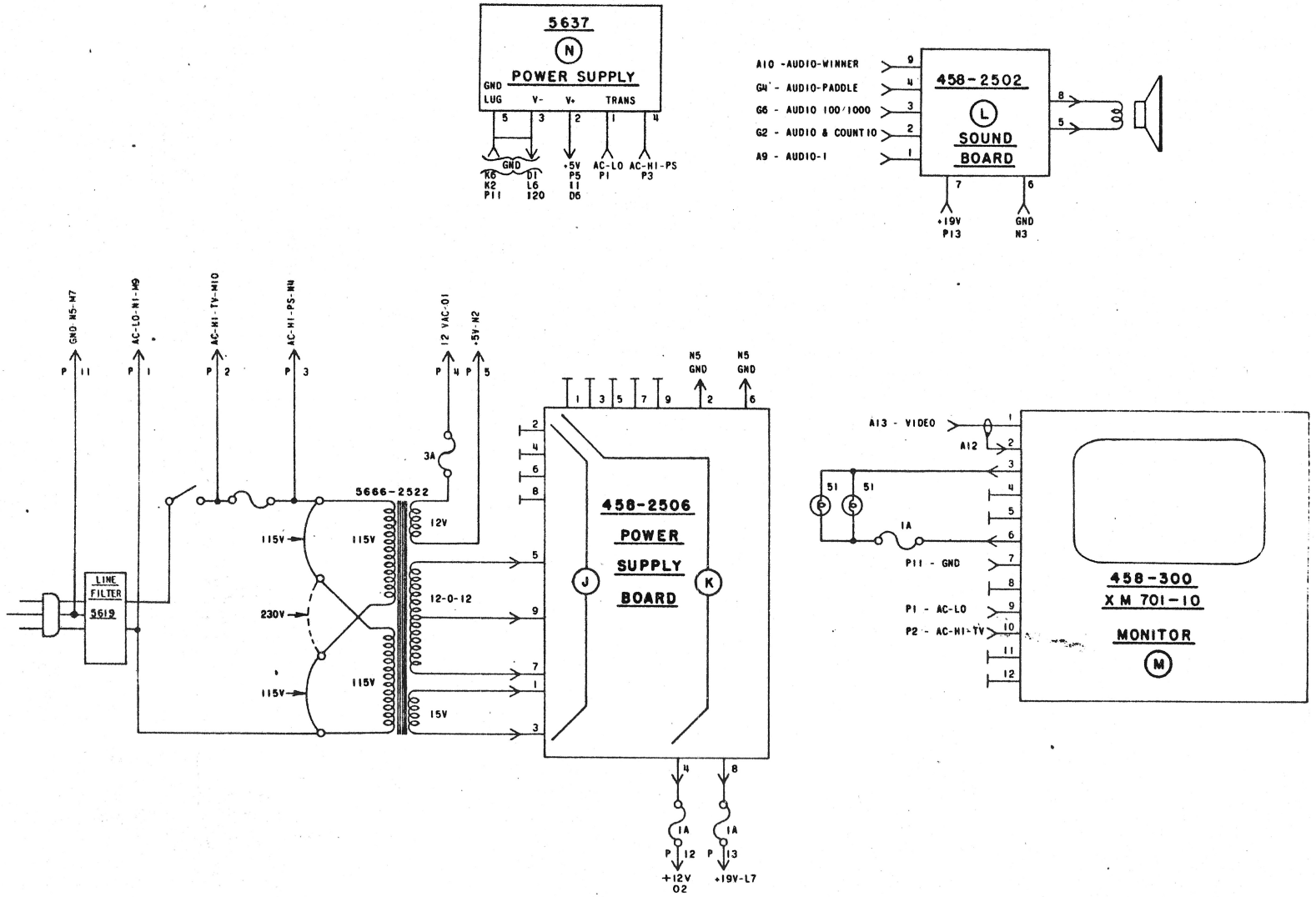

CHICAGO DYNAMIC INDUSTRIES, INC.	TV SUPER FLIPPER	458	PAGE
1725 DIVERSEY BLVD. CHICAGO	CABINET-B		14

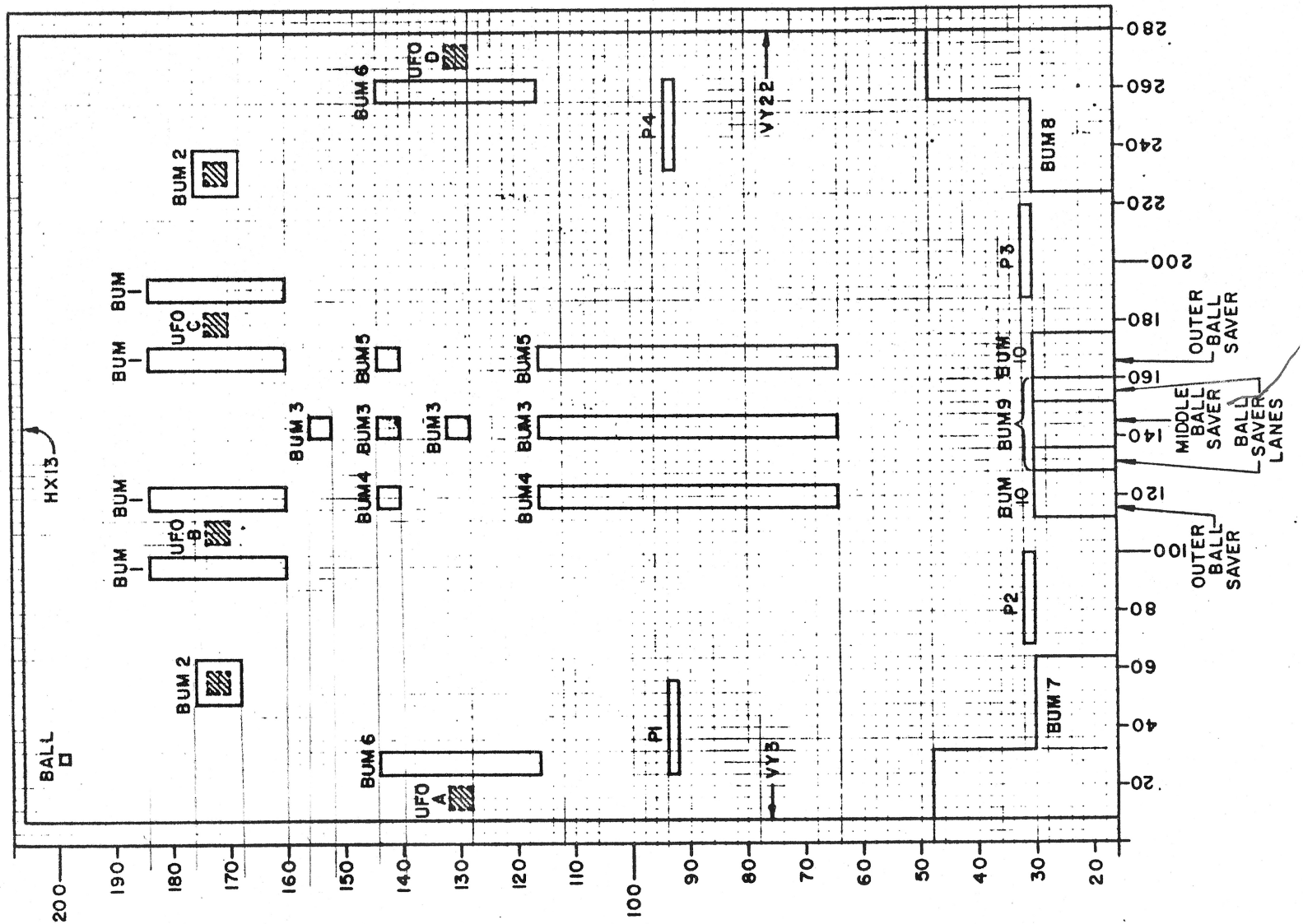

CHICAGO DYNAMIC INDUSTRIES, INC. 1725 DIVERSEY BLVD. CHICAGO	TV SUPER FLIPPER	458
	SCREEN BUMPER LAYOUT	

HI-SCORE & A-B-C-D TARGET LANES
ADJUSTMENTS FOR
EXTRA BALL AND/OR CREDIT

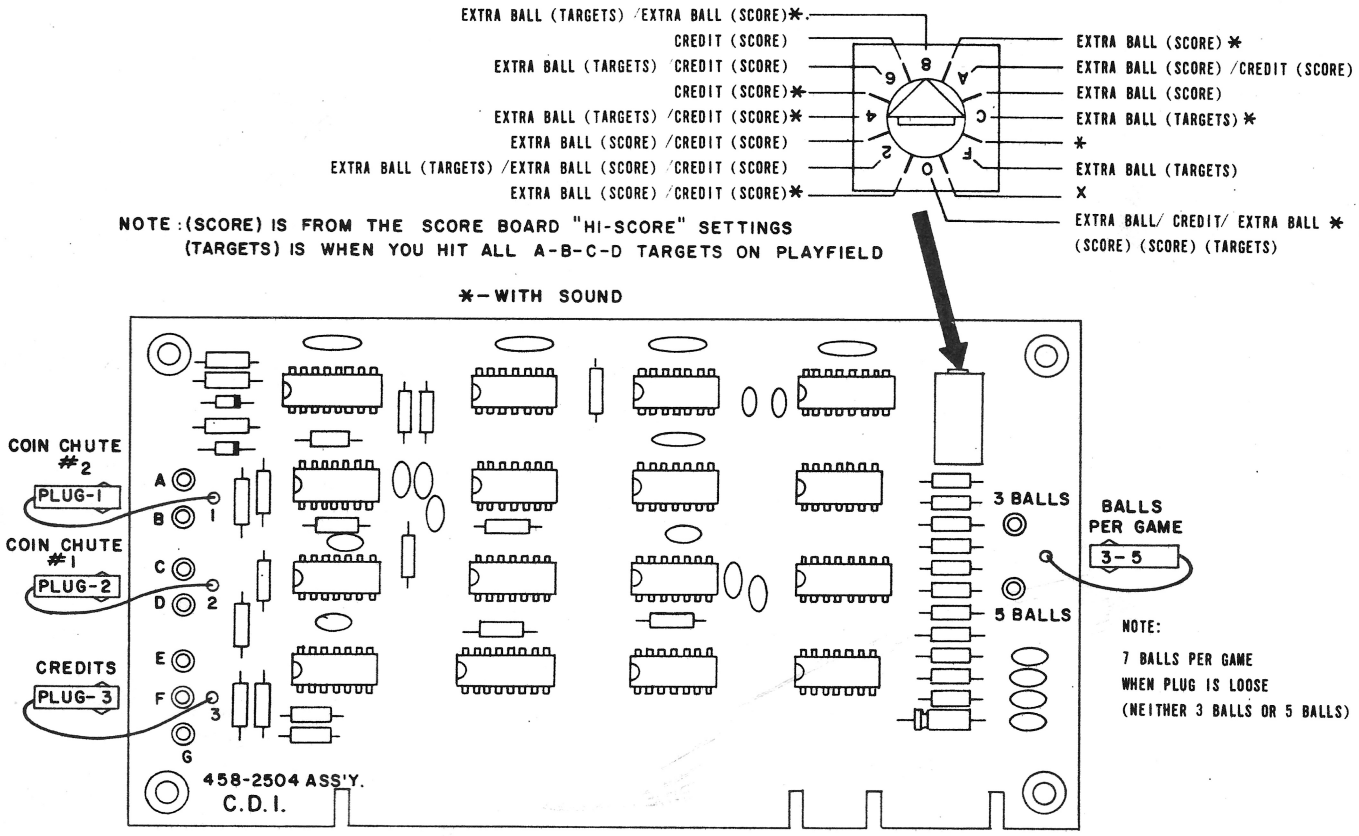

NOTE: (SCORE) IS FROM THE SCORE BOARD "HI-SCORE" SETTINGS
(TARGETS) IS WHEN YOU HIT ALL A-B-C-D TARGETS ON PLAYFIELD

*-WITH SOUND

COIN CREDIT ADJUSTMENT

PLUG-1 ON A - GIVES CREDIT FOR COIN CHUTE #2 AS INDICATED AT E, F OR G (BELOW).

PLUG-1 ON B - GIVES 1 CREDIT FOR TWO COINS. (COIN CHUTE #2)

PLUG-2 ON C - GIVES 1 CREDIT FOR TWO COINS. (COIN CHUTE #1)

PLUG-2 ON D - GIVES CREDIT FOR COIN CHUTE #1 AS INDICATED AT E, F OR G (BELOW).

PLUG-3 ON E - GIVES 2 CREDITS PER COIN.

PLUG-3 ON F - GIVES 3 CREDITS FOR TWO COINS.

PLUG-3 ON G - GIVES 1 CREDIT PER COIN.

OUT-HOLE BARS ADJUSTMENT

PLUG-1 ON A - FOR NO BARS
PLUG-1 ON B - FOR TWO "X" BARS (NORMAL)
PLUG-2 ON C - FOR NO "Z" BARS (SPECIAL)
PLUG-2 ON D - FOR "Z" BARS (SPECIAL)
"Y" BAR (BONUS)

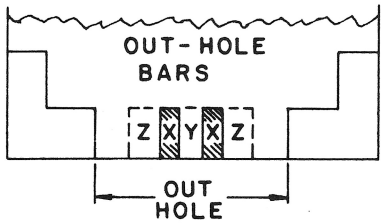

OUT-HOLE BARS ADJUSTMENT

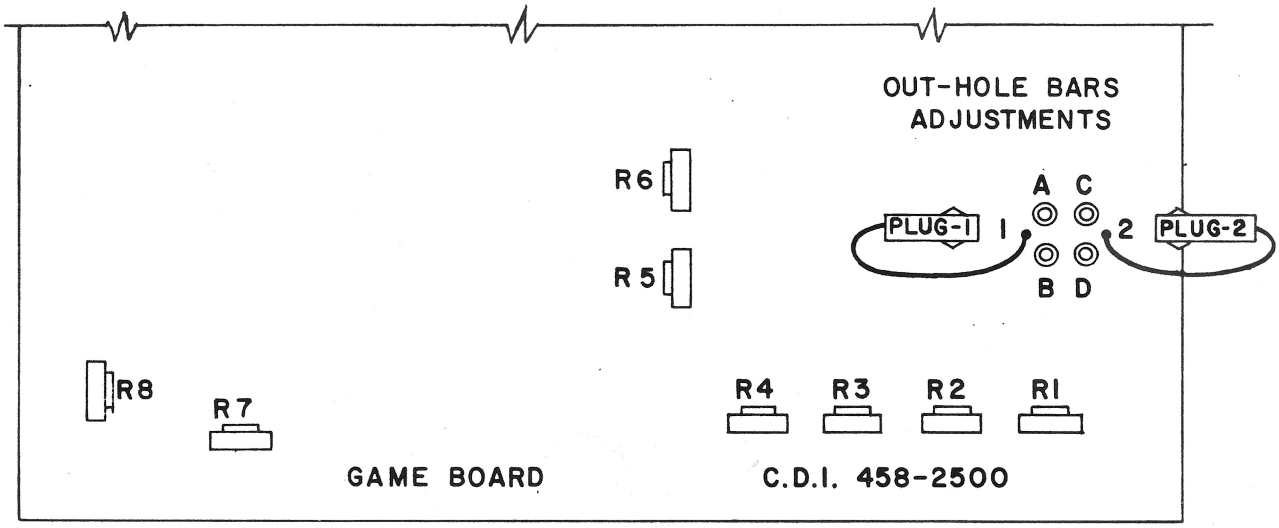

FLIPPER ADJUSTMENTS-R1-R2-R3-R4-R5-R6

ORDER OF ADJUSTMENT

R5. RIGHT SPACING - 1/8 INCH.
R6. LEFT SPACING - 1/8 INCH.
R2. FLIPPER PADDLE P1 - LEFT EDGE
1/8 IN. FROM WHITE OUTSIDE BORDER.
R1. FLIPPER PADDLE P2 - RIGHT EDGE
ADJUST TO CENTER OF "X" BAR.
(HOLD LEFT FLIPPER BUTTON WHILE ADJUSTING)
R4. FLIPPER PADDLE P3 - LEFT EDGE
ADJUST TO CENTER OF "X" BAR.
(HOLD RIGHT FLIPPER BUTTON WHILE ADJUSTING)
R3. FLIPPER PADDLE P4 - RIGHT EDGE
1/8 IN. FROM WHITE OUTSIDE BORDER.
R7. SET PIN 3 G4 TO 100 HZ.
GAME START BUT NOT SHOOT.
R8. CLOCKWISE - FASTER BALL ACTION.
C/CLOCKWISE - SLOWER BALL ACTION.

PLAYFIELD

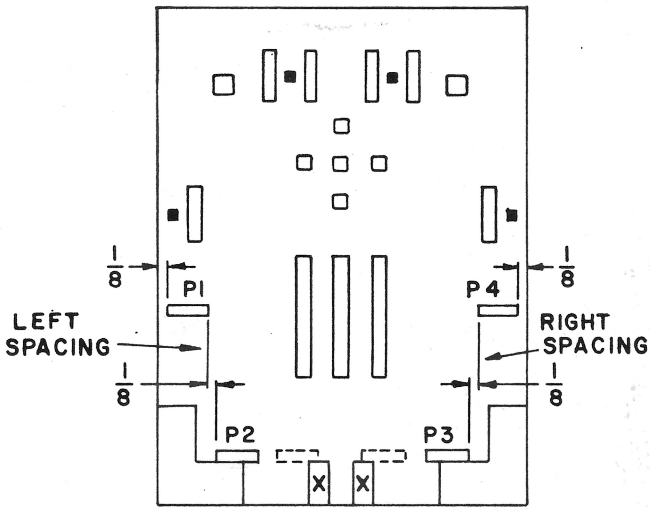

OSCILLATION (SOUND) ADJUSTMENT

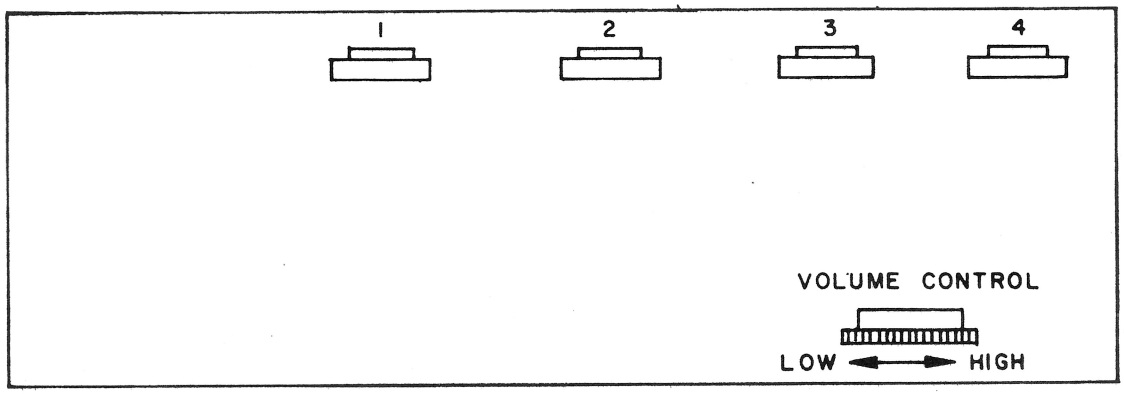

SOUND BOARD 458-2502

THESE ADJUSTMENTS ARE PRE-SET AT THE FACTORY AND SHOULD NOT REQUIRE ANY FURTHER ADJUSTMENTS.

SHOULD ADJUSTMENT BECOME NECESSARY, USE THE FOLLOWING PROCEDURE:

1. TURN VOLUME UP TO HIGH.
2. TURN POT-1 CLOCKWISE UNTIL YOU HEAR OSCILLATION (SOUND), THEN BACK-OFF UNTIL SOUND STOPS.
3. ALSO ADJUST POTS-2-3-4 IN THE SAME MANNER AS POT-1.
4. NOW SET VOLUME CONTROL AT DESIRED LEVEL WHILE GAME IS BEING PLAYED.

THE HI-SCORE SETTINGS BELOW
GO TO THE DIAL SWITCH ON THE CREDIT BOARD 458-2504

HI-SCORE SETTING FOR
EXTRA BALL, CREDIT AND A-B-C-D TARGET LANES

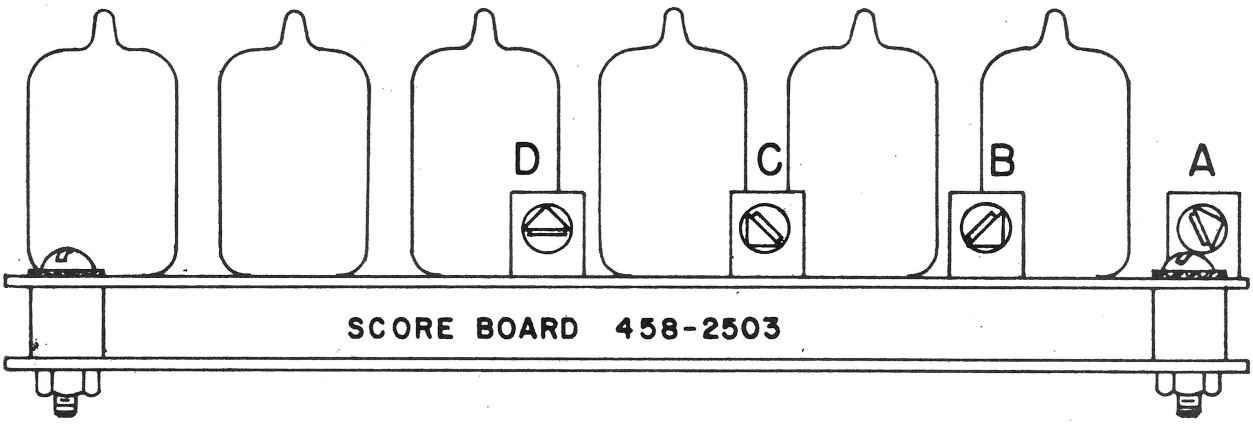

1. FOR ONLY ONE HI-SCORE

SET DIALS A, B AND C ALL AT THE SAME NUMBER.

EXAMPLE: DIAL-A-AT 3
DIAL-B-AT 3 ONE HI-SCORE
DIAL-C-AT 3 OF 30,000

2. FOR TWO HI-SCORES

SET DIAL "A" AT ONE SCORE.
SET DIALS "B" AND "C" AT SAME OTHER SCORE.

EXAMPLE: DIAL-A-AT 3 - 30,000
DIAL-B-AT 6 } 60,000
DIAL-C-AT 6 }

3. FOR THREE HI-SCORES

SET DIAL-A-AT ONE SCORE.
SET DIAL-B-AT A SECOND SCORE.
SET DIAL-C-AT A THIRD SCORE.

EXAMPLE: DIAL-A-AT 3 - 30,000
DIAL-B-AT 6 - 60,000
DIAL-C-AT 9 - 90,000

NOTE: WHEN MAKING MORE THAN ONE SETTING, THEY MUST BE AT LEAST 20,000 APART.

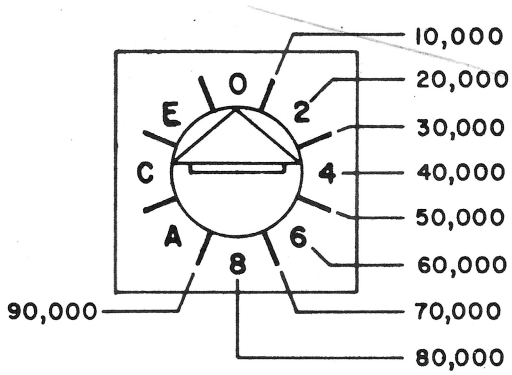

HI-SCORE SETTING SWITCHES
(A-B-C-D)

D-BONUS ADJUSTMENT

1. SET DIAL-D AT THE SCORE YOU WANT THE BONUS TO OCCUR.
2. SET DIAL-D ON LETTER "F" AND BONUS WILL NOT OCCUR.